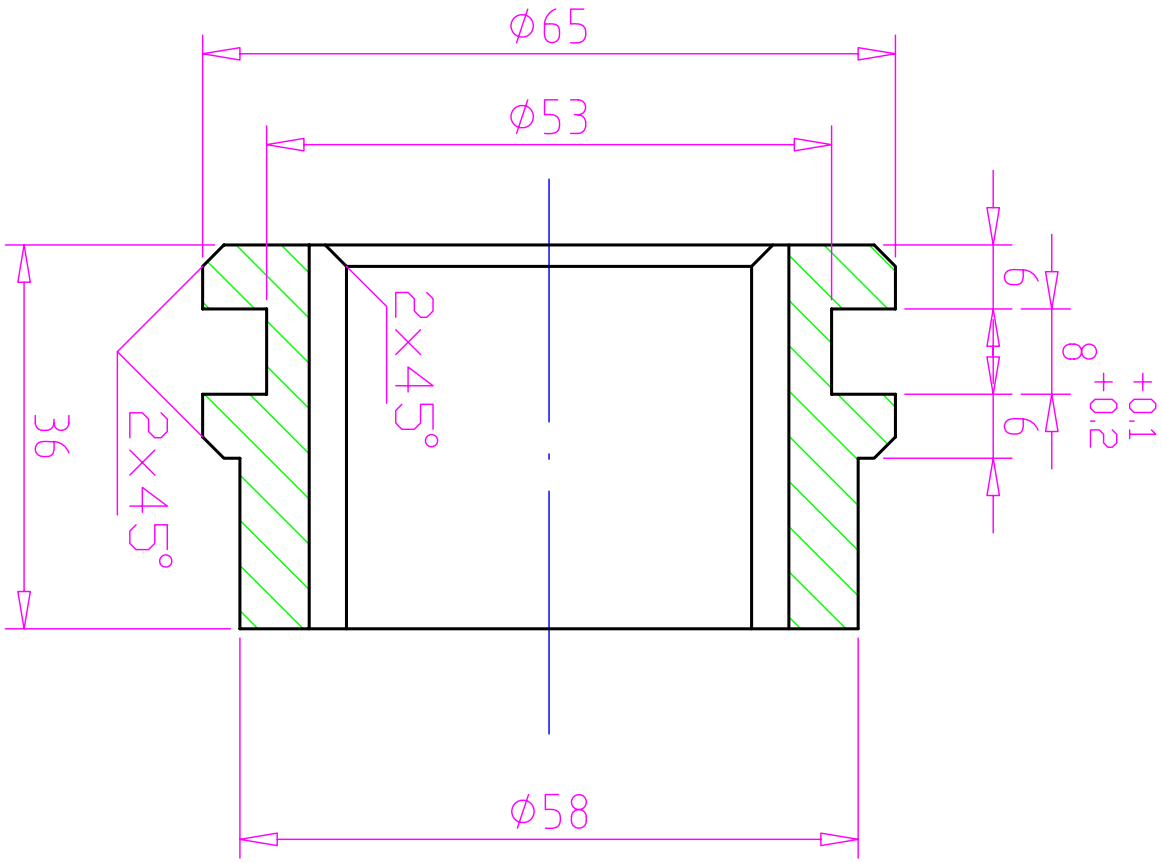
Ø65
Ø53
6
8
6
+0.1
+0.2
36
2×45°
2×45°
Ø58

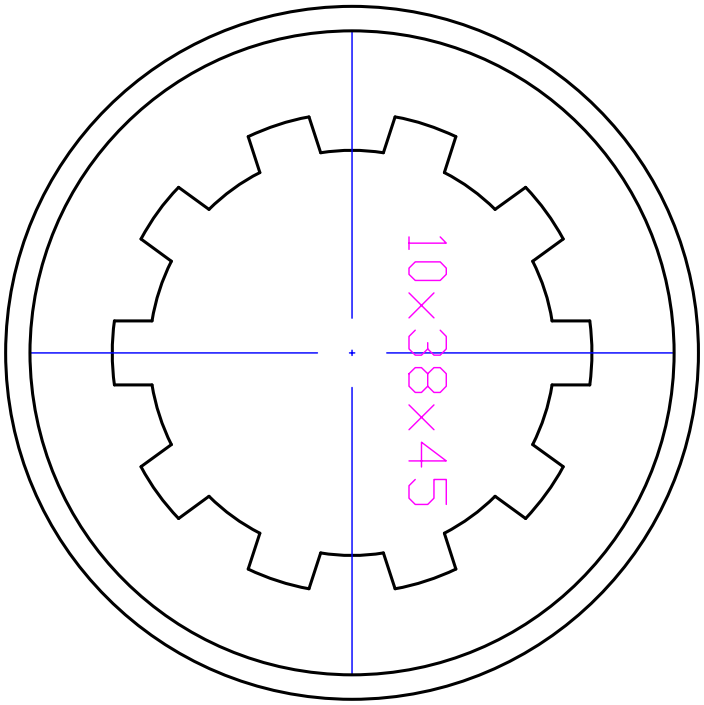
10×38×45